SOCOMHY
HYDRAULIQUE & MECANIQUE AGRICOLE

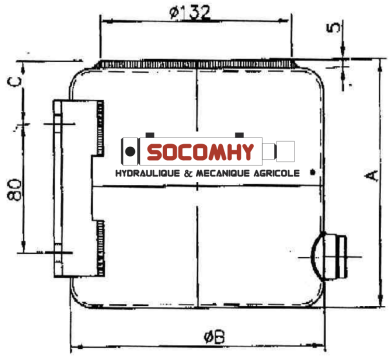

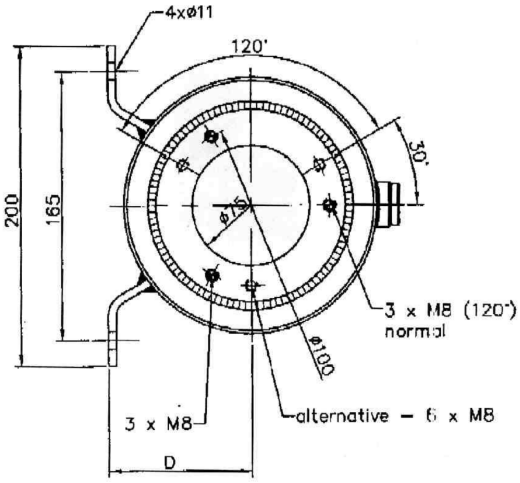

Type		Tank oil	A	B	C	D	kg
R2/3(502–01)	R2/6(502)	2 l	135	160	30	90	2.5
R3/3(416–01)	R3/6(416)	3 l	165	160	40	90	2.8
R5/3(418–01)	R5/6(418)	5 l	215	185	53	106	3.8
R7/3(500–01)	R7/6(500)	7 l	245	205	53	120	4.5